A Study on Modular Design for LCD TV

Article · January 2006

Source: DOAJ

3 authors, including:

Yuan-Ping Luh
National Taipei University of Technology

Chih-Chin Pan
Alpha Precision Instrument Corp., Taipei, Taiwan

A STUDY ON MODULAR DESIGN FOR LCD TV

Yuan-Ping Luh[1*], Chih-Chin Pan[2] and Wei-Sheng Lin[3]
[1]*Institute of Manufacturing Technology*
[2]*Institute of Mechanical and Electrical Engineering*
[3]*Institute of Mechtronic Engineering*
National Taipei University of Technology
Taipei (106), Taiwan

ABSTRACT

Nowadays, due to the gradually mature on LCD TV related technologies, the profit margin of LCD TV has become thinner. Finding a niche point to overcome such difficulty is comparatively important at this moment. As stated by many literatures, the concept of modular design had been applied to many thin-margin products, such as personal computer, and received highly successful. However, the modular design concept has not been adopted by LCD TV industry currently. This paper explains how to embed modular design concept into LCD TV products and to illustrate a methodology to establish modular product architecture for LCD TV with cost and performance considerations. The modular architecture of the LCD TV are designed as building blocks which could be grouped together to form a variety of products. This approach will promote standardization and the re-use of existing modules to develop new products. Finally, this paper provides a simple example to illustrate how modularity can reduce inventory and promote customer service level.

Keywords: Modular Design, Product Architecture, LCD TV

1. INTRODUCTION

In the past few years, digital cameras have gradually replaced traditional cameras and MP3 players have also superseded the walkman as well. Obviously, such revolution from convention to digital has penetrated into home electronics industries. It is believed that one of the most shining stars of home electrical appliances is LCD TV. In a survey conducted by some of the famous manufacturers for electric appliances, TV has become a necessity for every household in the twenty-first century. Although traditional CRT TV comes with the basic functionalities such as powering on, changing channel/volume, the potential and advanced needs for connecting to other digital peripherals, such as DVD, MP3 players, and PDA require the digital LCD TV to handle. Therefore, developing LCD TV and PDP TV are not only with the intention to obtain a market share in the annual 180 million TV sets market, but also targeted towards a trend for replacing the CRT TV for LCD TV/PDPs within the next six years for a total of approximately one billion sets. In addition, the possibility of having a second TV at home can result in a market of 40 million TVs. As the result of forecasting, the LCD/PDP TV seems to be the most promising market.

When comparing LCD TV and PDP, LCD TV has the advantage of easier to get higher resolution, faster response time, higher color saturation, higher definition/resolution/contrast, and reduce cost. At contrast of getting higher resolution for PDP, the efficiency of plasma will be decreased. The waveform transmission and voltage will cause an increase in cost on the condition. For example, comparing a 1024x768 PDP and a 1920x1080 LCD TV, LCD TV has higher resolution, clearer screen, and same price. Obviously, LCD TV is a more preferable choice for most of consumers.

From IDC's report [5], the total number of LCD TV sold is forecasted to be increased from the current 4% to 43% in 2007. The sales of LCD TV will reach a peak in the next few years. According to the report by iSuupli [2] done on March 2005, the total sales revenue for LCD TV is 4.5 billion US dollar in 2003, 13.7 billion US dollar in 2004, and is forecasted to be 22.4 and 22.5 billion in 2005 and 2006. Chen et al. [3] predicted that the market for LCD will continuously grow to more than 40 million sets. The total number of TVs will be more than 195 million. The annual growth of LCD TV is 127% in 2005 and 110% in 2006. In addition, it is predicted that the penetration rate of LCD TV will reach to 80% in 2010, that is, 200 million LCD TV sets in

* **Corresponding author: yuan@ntut.edu.tw**

total. Therefore, the next upcoming few years will be the beginning of the huge market growth of LCD TV.

As the fact of fierce competitions, the first-tier LCD TV manufacturers cut down the profit margin consecutively. From a Display Search report [23], the profit has reached the lowest level of 13% than ever at fourth quarter 2005. Chen et al. [3] mentioned that the price of LCD TV went down by 50% every year since the year 2000. As the price of LCD TV become more affordable to the general public, the profit margin is also decreased. In the future, it is believed that one of the feasible ways to survive in LCD TV market is to standardize the LCD TV products, so that to shorten the development time, lower the cost and shorten the product requirement cycle.

This paper will focus on finding a way to escape from the corner of highly competitive and low profit margin market of the LCD TV. On the achievement of product modularizations, the PCs market is continuously growing up. As the similarities between PCs and LCD TV, taking the advantages of product modularization and applying such concepts on product development of LCD TV could be a feasible way in the near future.

2. IMPLICATION ON MODULAR PRODUCTS

2.1 Modular Product

LCD TV, PC and mobile phone are all in the category of electronic products. Due to the fact that the development history of PC industry is longer than LCD TV, many successful stories in PC industry could also be taken as the best practice for LCD TV.

In 1964, IBM developed the first modularized computer, System360, by applying the product architecture concept. Since that time, PC industry inherited the same concepts to enable highly modularization. Today, everyone can choose a variety of components, as long as they are compatible with each other. For example, you can choose the hard disk made by Hitachi or Seagate, the motherboard made by Gigabyte or Asus. As the result of mature modular design for PC industry, the components in a PC can come from different manufacturers, therefore customers can choose the product with various combinations to meet their needs. When the hardware no longer meets today's requirements, upgrading the current component to improve the system performance is also possible. For instance, upgrading CPU to a higher performance one is a common decision made by many buyers.

By advantages of highly modularization of PC industry, upgrading specific module to enhance the PC performance by replacing the corresponding components can be realized. Therefore, such modular products with the characteristics of varieties and customization can be much more competitive by providing different specifications for different groups of consumers.

2.2 Benefits of Modularization

In the current industry circumstance, only few cases is essential innovative on product development. In most of the cases, new functions are usually built upon the current architecture. The concept of modularization is already popular in the building industry, automation equipments and software industries. This is even more common in the automotive, aerospace, machine tool and IT industries.

A summary of the benefits for modular design has been mentioned in a number of articles as below:

1. Reducing the cost: As pointed out in literatures [10,11,14], the number of component used within a product can be reduced by using the concept of modular design. Hence the effort required for managing these components can be reduced too. In addition, manufacturing the modular design product can reduce the component incompatibility and lower the defective rate of product.
2. Increasing product varieties: In literatures [10,11,15], a derived product can be developed within a short time by combing the modules in different ways.
3. Shortening new product development time: In literatures [9,18,20], modular product architecture is built from modular design of standardizing components and interfaces. Therefore, a product family can be derived by using the modular architecture. The new product development time can then be greatly reduced.
4. Leveraging design efficiency: In literatures [12,18], the advantages of modular design is clear and obvious by separating a complex problem into some smaller individual ones. The result of solving each individual problem can lead to straighten out the monolithic problem. Therefore modular design provides a way of effectively solving a complex problem.

As a conclusion, the objective of modularization is to reduce the cost, cut down the inventory, simplify the design and provide product variety by utilizing the common modules and configuring the module combinations. The key point in the Commonality Theory [4] is that using shared materials/resources to develop products can reach the goal of product variety.

By using modular design, utilizing shared materials/resources to provide customized alternative options can effectively reduce the number of materials used within all product lines. The traditional way of single product resource planning

must be replaced by a new approach which can provide customer multiple configurable product configurations, called configuration management [13]. Taking the PC as an example, assuming 10 different categories of components are installed inside a PC. These components can be CPU, hard disk, CD Drive, or casing etc. In the case of two choices for each category, such as Intel and AMD CPUs for CPU choice, the total number of combinations will be up to 2^{10} combinations. Traditionally, there must be one specific BOM for each type of component combination. This means that there must be 1024 BOMs in total to be managed. Such condition will cause management problem on product information. Comparing to the use of configuration management, only 20 (10 x 2) distinct components in total are needed to be managed. This result is much simpler than using the traditional way to manage the product information.

Effectively using modular design [22] with configuration management in the manufacturing of PC to place orders has improved the business model from Build-to-Forecast (BTF) to Build-to-Order (BTO). Additionally, the modular design process could also enable BTO to Configure-to-Order (CTO) business model potentially. Both Dell and Compaq computer have successfully applied BTO and CTO to reduce the number of inventories and customizing for different needs in global logistic management.

2.3 Concepts, Definition and Categorization of Modularization

The concept of modularization has been applied in the new product development of machine tool industry by separating main functionalities from the machine's architectures. Each sub-module then becomes an independent one. Different machines can be developed by combing each module for different purposes and functions.

Later on, some studies have tried to define a definition for modularization. Sanchez and Machoney [17] point out the importance of using standardization interface for modularization. The modularization has been defined as follows: "The modular architecture can be applied to the standardization interface modules and this is a special case for making the product architecture a flexible one. O'Grady [14] gives the definition of modularization as follows "Modularization is the combination of a group of modules to make up a product. Each module might be complex but it must define a specific interface. This interface is defined as to make each module compatible to each other and eventually provide product variety in a short time. In Baldwin and Clark [1] concluded that modularization is a special architecture with the advantages of having independent but related modules. It simplifies the design process.

Below we give a summary of the scope of modularization by the definitions given in Ulrich [21]:

- ✓ Component-swapping modularity: It happens for two or more than two components. By swapping the component for a same module, it results in products that meet the different needs of the customers.
- ✓ Component-sharing modularity: When different modules share the same components, different products are developed.
- ✓ Bus modularity: Use bus modularity on two or more interfaces for the same module. These interfaces are compatible with other basic components to provide additional functions.

2.4 Remark

PC has become a highly modularized product by using modular design as the key design concept. The modules can be upgraded and replaced to make up different products that meet the needs of the different market. Below we have suggested a way to apply the concept of modularization in LCD TV that can provide product variety in a low inventory level.

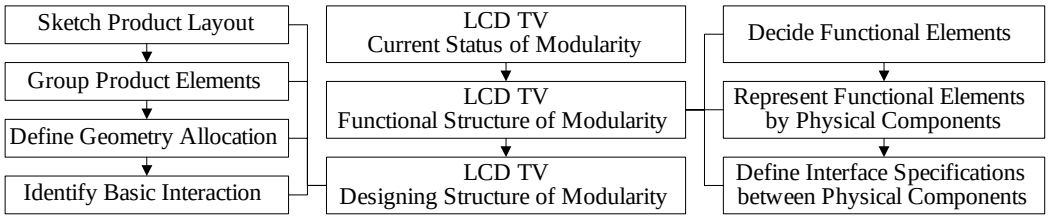

Figure 1: Design flow chart for LCD TV modularity

3. APPLICATION OF MODULAR DESIGN IN LCD TV

There should be gradual approach for the modularization of LCD TV. Figure 1 gives the flow chart for the modularization of LCD TV. The flow chart begins with the analysis of the current modularization status of LCD TV, and then it processes to the 4 steps of the product design using functionalities as the basis of the architecture. Finally we will use an example to illustrate the advantages of using modularization in the LCD TV industry.

3.1 Current Status of LCD TV Modularization

The LCD TV can be composed the following modules: Front Module, LCD Module, Back Module base and external power adapter. The LCD Module can be further divided into LCD Panel, Main PCB, Power PCB and the bracket. The main PCB is composed of graphics and control chips, printed circuit board and LVDS cables. If this main PCB is used for LCD TV, then an additional tuner component will be required. The development of LCD TV has been utilized as an example in this study. Firstly, a particular tuner system for a specific country needs to be chosen that is a key point in the design of a main PCB. Secondly, design a LCD TV that has the appropriate dimensions, colors, viewing angles, contrast brightness and response time that meets the expectations of the particular market. Select different LCD panels with different dimensions and the number of light sources will vary with the dimensions; generally the number of light sources used is directly proportion to the LCD panel sizes. As the number increases, the voltage and electric current output for the design of the power PCB will increase too. The chips on the main PCB are responsible for the characteristics such as high contrast, quick response time and high color saturation of LCD TV. Therefore the design of chips and panels are relatively complex.

In conclusion, the current design of LCD TV still concentrates on the electrical design aspect mainly, associated with mechanical and industrial designs. As the significant decrease in the profit margin of the LCD industry, such non-modular design of LCD TV will cause a serious problem in time and cost control. For example, when different panels are chosen by customers, the main PCB might need to change its relative position due to the change in the positions of the panel signal cables and the light source. Another example, if the chips on the main PCB need to be changed due to higher screen definitions, higher contrast and quicker response time. If chips are changed, the design of the circuit board, transmission of signals and supply of power also need to be changed. The entire mechanical design of the power PCB will therefore get changed due to a change in main PCB. These design changes are a result of “Chain Reactions” [16]. “Chain Reactions” refers to the situation where a change in one of the components in the product will cause a re-design of the whole product. This result dramatically extends the product development time since the rest of the components and their interfaces need to be redesigned.

Hence, if the design of products is not modularized, there will be a long development time when trying to customize the product for different customers. Its effect on the manufacturing process is that a BOM cannot be made dynamically. This lack of modular design will not make mass customization of products for different customers and shortening the product development time possible. Hence it brings a great difficulty in the CTO ordering process.

The concept of modular design in LCD TV refers to the system engineering of product design from the beginning of the process. The system engineering mainly concentrates on the compatibility of components. After system engineering is done on the new product, all components that make up the product must follow some kind of rules and standards. Its derived products must be developed without changing the basic rules and standards. For example, when higher definitions, high contrast and quicker response time are required, by using modular design, the product can be developed by changing the chipset that affects the color definition, contrast and response time. This new product can then be manufactured after it has passed the engineering validation. The aim of modular design is to use aggregations of shared materials to lower the cost, and therefore improve the product development time and meet the expectation of having product variety. In the future, as the modular design in LCD TV has matured, it will also benefit from the CTO ordering process.

3.2 Architecture of Modular Design of LCD TV

As outlined by Ulrich [19], three steps have been proposed for the applications of modular design in the product development process. Firstly, function elements composed by a product are defined. Secondly, physical components are applied for specific functionalities. Finally, the interface specifications for each component are determined. Also, distinguish the functionalities of a product to define its appropriate interface specifications. Hence the architecture for modular design can be drawn.

3.2.1 Defining Functionalities of the Product

The first step is to define the product functionalities that a product needs. For example, a LCD TV must provide visual and acoustic functionalities in order to derive other related functions. These functions can then provide support for each component in the architecture, support for power supply, easy-to-use shortcuts and integrate each component for efficient use.

3.2.2 Applying Physical Components for Specific Functionalities

After defining the functionalities that a product needs, physical components are used for specific functionalities. Figure 2 illustrates that a LCD panel is used to fulfill the visual display requirement. Use speakers to for the acoustic sound; the structure that supports each component is usually designed by mechanical engineers. In LCD TV, besides its casing and basement, there is a special design that supports

the LCD panel and other parts of the LCD TV. This is named "Base Plate". The base plate is used to support LCD panel and it can also be used to support other PCBs on the back side. Voltage is supplied by adapters, and high voltage board to provide different voltages and currents outside and inside. This then later transferred the voltages to LCD panels or other parts of the LCD TV that need them. Easy-to-use shortcuts are done by PCBs with several control buttons. Finally, the whole operation is controlled by a main PCB which includes several controls, displays and driver chips, with ports that connect to each interface.

3.2.3 Defining Interface Specifications

The connection between components is facilitated by the interface specification. The interface specification is used to define the interconnection between components and their geometrical relations. This is illustrated in Figure 2.

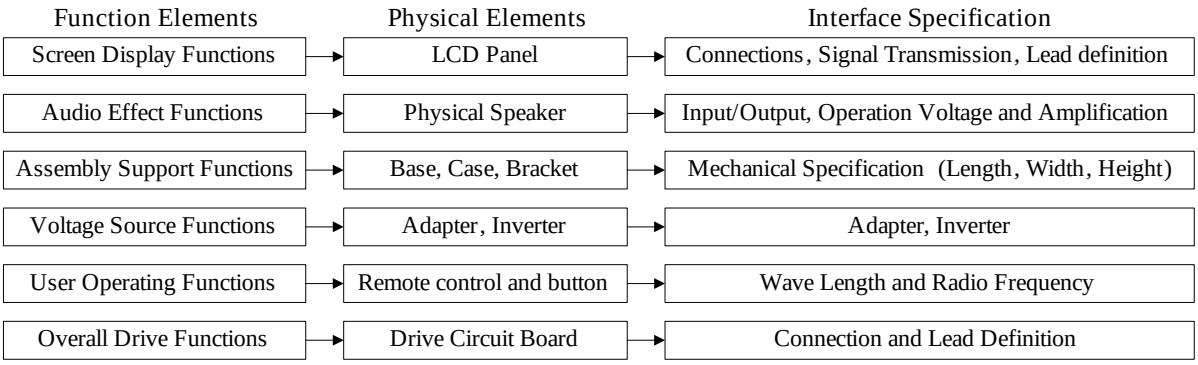

Figure 2: LCD TV function structure

3.3 Design of Modular Architecture

To meet the goal of modularization of LCD TV after architecture for the LCD TV modularization being defined, the concept of product architecture is introduced. The product architecture references the functionalities of the components and the interfaces between them. It can be defined by the following 4 steps:

- ✓ Drawing a rough draft for the product
- ✓ Gathering together of the major components in the draft
- ✓ Setting up a rough draft for their geometrical allocations
- ✓ Confirming interconnections between them

An example follows these four steps to build product architecture for LCD TV is illustrated next.

3.3.1 Drawing a Rough Draft for Product

The first step towards the modularization of the LCD TV is to define its product architecture. By drawing a rough draft for the product, we can easily track down its status and hence setting a rough objective for it. The purpose of this is to identify the characteristics of the product architecture.

Figure 3 illustrates the concepts of the LCD TV. Its status is seen from the diagram. The LCD TV can receive signals via 4 different routes from outside; this includes digital satellite, digital ground, network and cable TV cord. Signals received from these 4 routes can be categorized as either analog or digital signal. If it is a digital signal, the signal separation and distribution can be done directly. But if it is an analog signal, first demodulation and amplitudization needs to be done before it is transformed to a MPEG-2 transport stream. Later signal separation and distribution took their effect on it later. After signal separation, the transport stream for video frequency, audio frequency, and data can be distributed to the appropriate video frequency decoders (such as MPEG-2/4 or H.264), audio frequency decoders and data decoders as the original data.

Afterwards, the data is sent to the CPU and from that it is sent to the appropriate communication protocol, for example V4L2, RTP/RTCP/RTSP, HTTP and Java applications. The signals sent to OSD or DAC are used for screen display and audio play.

3.3.2 Gathering Major Components in Draft

The development of the modular architecture of a product implies that one module is designed for a specific function of the product. From the design point of view, this means that only a specific module needs to be changed without changing other modules in order for product to function normally. Therefore, each module is independent from other modules and this facilitates the addition or deletion of functions.

Since the implications of modularization have been discussed earlier in the article, the three previously mentioned types of modularizations are used for aggregations of components for the draft of LCD TV. As illustrated in Figure 4, the casing and base of LCD TV can be grouped as the casing and base module. The structural support for the interior components of LCD TV is the foundation module. The transformation of the voltage from AC to DC is

done by adapters. The adapter module is capable of supplying different DC voltage for each component. The signal input/output tunnel is the input/output interface module. The micro processing interface module includes analog signals for demolulation and amplitudization, signal separation and distribution, and communication protocol. The decoding module is responsible for managing the video frequency signals, audio frequency signals and the decoding of other data. The central processing can be done by one or more chips, which is called the CPU module. The user interface modules can indirectly receive control commands from remote controller or control buttons. The panel and speaker modules are responsible for screen display and audio play.

From Figure 5, the interfaces for signal input/output and micro processing and the decoding and CPU modules are integrated in a main PCB module for sharing, standardizing, partial changing and integrating geometrically.

3.3.3 Setting up a Rough Draft for Geometric Layout

By following Step 2, the geometric allocation of the LCD TV can be viewed from Figure 6. In this figure, the main components of the LCD TV and the geometric allocation of LCD TV in relation to the interconnections among modules are shown. For example, how to design the foundation module in order for it to support the inner modules: or, how to design a casing and a base that meets the fashion requirement. From the rough geometric allocation, the mechanical engineers can use this for the initial planning of the product and later used it for future reference.

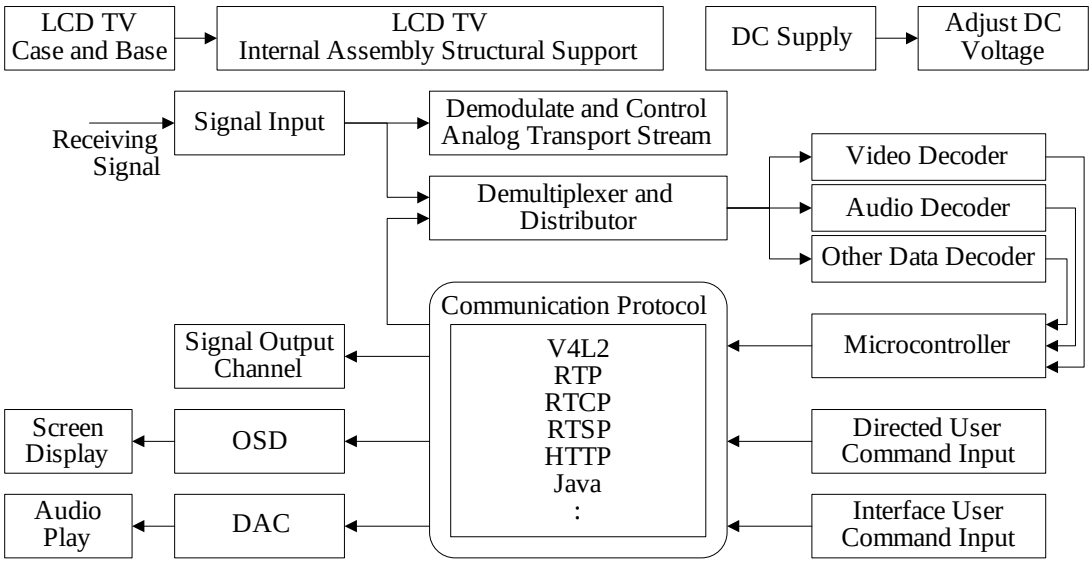

Figure 3: LCD TV product schematic diagram

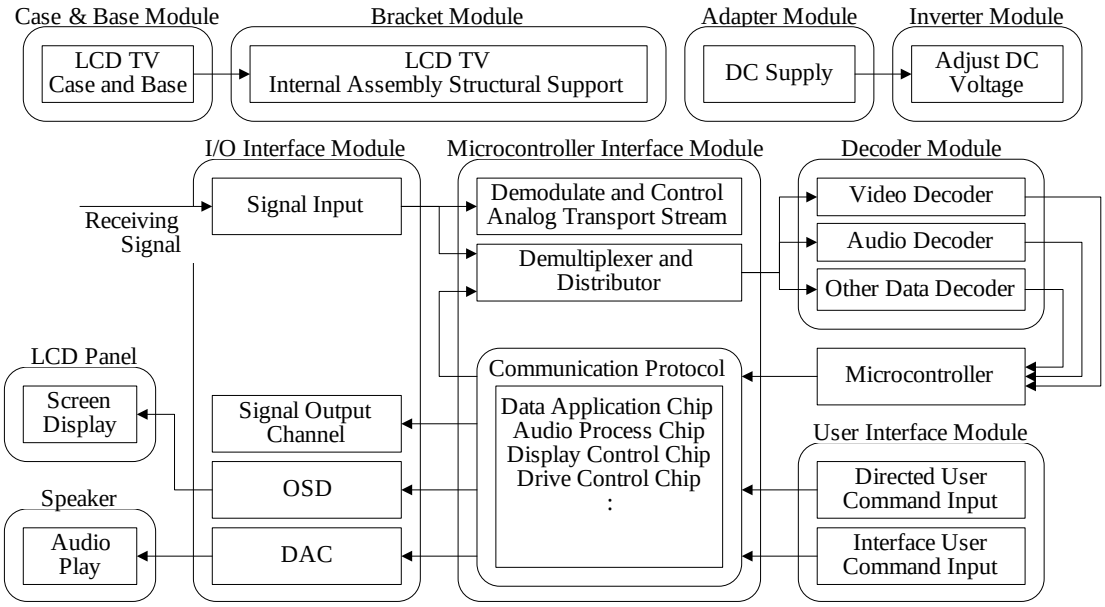

Figure 4: Grouping LCD TV schematic elements

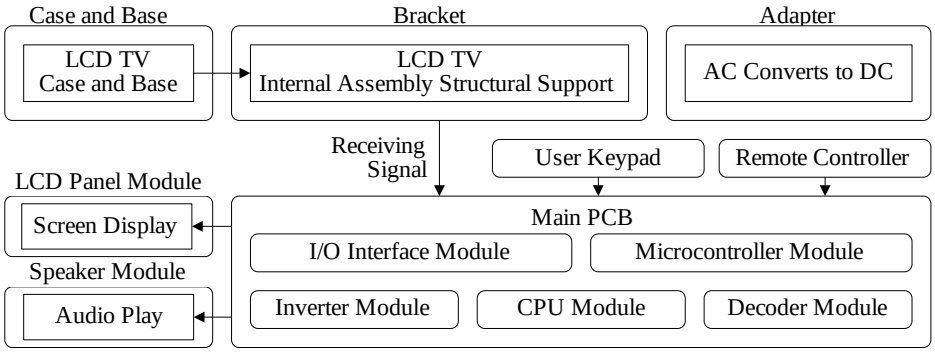

Figure 5: LCD TV product modularity

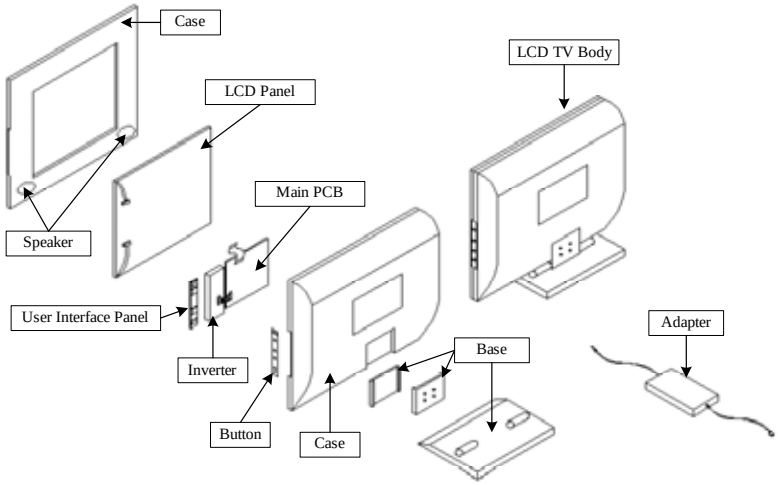

Figure 6: LCD TV product geometric layout

3.3.4 Confirm Interconnections between Modules

The components inside the LCD TV are usually designed by different teams. In order to communicate efficiently for different teams, therefore the interconnections between modules must be confirmed. Figure 7 shows the interconnections between the modules of a LCD TV. There exists a basic interconnection between the panel module, the speaker module and the foundation module since the structure of the foundation module is designed to support these 4 modules. Due to the design issues of external appearance, the casing and base module has an interconnection with the foundation module, the interface module, the LCD panel module and the speaker module.

The interface module receives infrared signals from the remote controller. The main PCB receives signals from interface module with the DC voltage received from the adapter module. The signals for video and audio frequency are then transferred to the LCD panel module and the speaker module. In conclusion, the interconnections between modules are illustrated in a simple diagram for the convenience for future designs.

3.4 Application of LCD TV Modularization

The main reason for the modularization of LCD TV is to facilitate changing, upgrading, extending and enhancing the product line by using the existing product architecture as the basis. For example, Figure 8 shows a BOM for the original design (option A) of LCD TV. To accomplish various consumers' needs, different options have to be provided. As shown in Figure 9, a BOM for option B of the design of LCD TV is generated. The differences can be distinguished from Figures 8 and 9. Their differences are due to the fact that when functions of the LCD TV are upgraded, higher graphics chip and CPU chip are needed. Even if same amplitude, PCB and interface are used in these two options, the option of Main PCB still needs to be changed.

In addition, by comparing Figure 8 and Figure 10, with option A of LCD TV and option C of LCD TV respectively, the differences stemmed from the fact that the TV signals are different from country to country. Hence only the amplitude needs to be changed for LCD TV. Therefore by changing a specific module, the derived product can easily be made up by making minor changes for a specific market need.

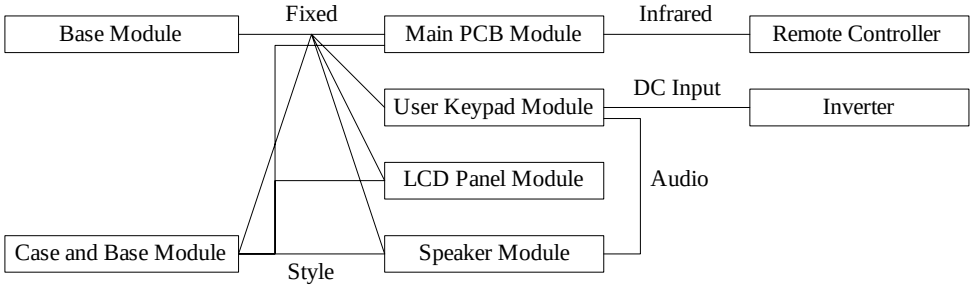

Figure 7: Interaction between LCD TV product modules

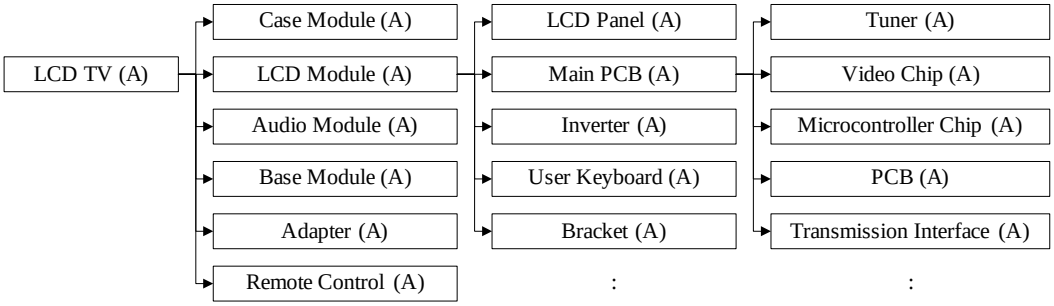

Figure 8: Combination of LCD TV (Option A)

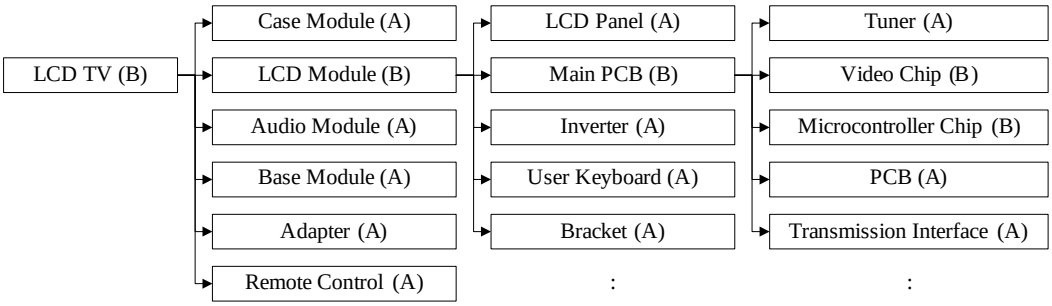

Figure 9: Combination of LCD TV (Option B)

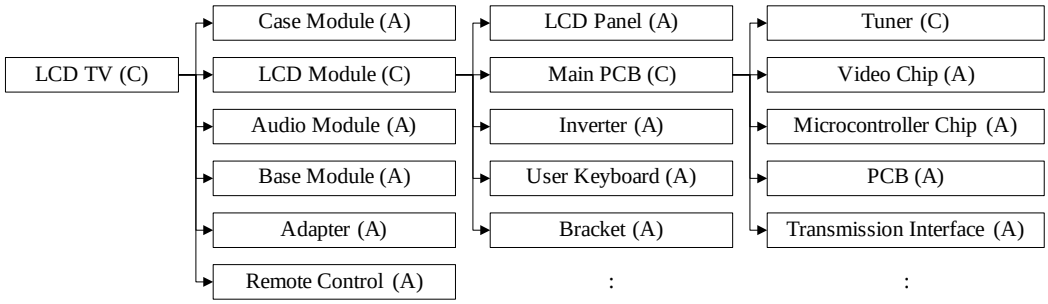

Figure 10: Combination of LCD TV (Option C)

In the issues of customer relations and inventory management, modularization is done based at the lowest inventory level. An example of this scenario is shown as follows. In Figures 8 and 9, there are 6 modules in the first step of option A LCD TV and option B LCD TV. If no modularization is used for both option A and option B, then in total 6 modules are required for each option respectively. Therefore a total of 12 modules are required. But, by using the advantage of modularization, besides the LCD module, other modules such as casing module, speaker module, base module, adapters and remote controller can all be shared between the two options. If we forecast that there will be a requirement of 1000 LCD TVs in total for both options, from Table 1(a) we see that 1000 sets of modules for both options are needed. If the order is 800 for option A and 200 for option B, there will be 6000 sets of modules left unused despite the fact that all promised orders are delivered.

On the other condition, for 1000 LCD TVs, only 500 sets of modules for each option A and option B are prepared. When the actual orders for option A is 800 and for option B is 200, the number of unused

modules for option B will be 1800 sets. For option A LCD TV, it will need 1800 more sets of modules. Only 62.5 % of the promised orders are delivered, as illustrated in Table 1 (b).

Table 1 (a): Inventory level of non-modularized LCD TV between option A and B (Condition 1)

Non-Modularized	**Option A**	**Option B**
Requirement Forecast	1000 sets	
Prepared Modules	1000	1000
Actual Orders	800	200
Order Completion	100%	100%
Inventory Level	200x6 1200 sets increased	800x6 4800 sets increased

Table 1 (b): Inventory level of non-modularized LCD TV between option A and B (Condition 2)

Non-Modularized	**Option A**	**Option B**
Requirement Forecast	1000 sets	
Prepared Modules	500	500
Actual Orders	800	200
Order Completion	62.5%	100%
Inventory Level	-300x6 1800 sets shortened	300x6 1800 sets increased

Table 1 (c): Inventory level of modularized LCD TV between option A and B

Modularized	**Option A**	**Option B**
Requirement Forecast	1000 sets	
Prepared Modules	1000	1000
Actual Orders	800	200
Order Completion	100%	100%
Inventory Level	No inventory for common modules	
	200 specific LCD modules increased	800 specific LCD modules increased

However, as shown in Table 1 (c), it can be seen that by using modularization, for 1000 LCD TVs, only 1000 sets of modules are shared between option A and option B with the used of 1000 LCD modules. When the order is divided into 800 for option A and 200 for option B, the orders can be delivered 100%. The shared modules result in a lowest inventory level and therefore only 1000 specific LCD modules for option A and option B are left. The example shown in Table 1 (a) through (c) illustrates that the results of LCD TV modularization can effectively improve customer satisfaction and manage inventory at the lowest level.

4. CONCLUSION AND FUTURE STUDIES

4.1 Conclusion

The LCD TV industry has always been something of an interest to the enterprises. This emerging industry has gradually becomes more mature as the technology develops. Although technology and innovation are keys to being the leader of the market, efficient management plays an important part in the development of an enterprise.

In the current LCD TV industry, although the key elements such as response time, color saturation and resolution are not yet reach a perfect level, they have little influence on the product as a whole. There is only a minor difference between the design and the manufacturing process technology of different companies. There is even a case of several local companies trying to import the manufacturing process technology from the same overseas company. For a mature industry, technology is only served as a basis for the enterprise. The most vital part that distinguishes the various enterprises is its improvement done on the management side.

In the past, many LCD TV enterprises rely on efficient management in order operate their businesses. The development of the LCD TV industry will take a step further if the enterprises are well-managed. The management of a product includes the management strategy, the business operation strategy and most importantly, a good understanding of a particular product. The management process must begin on the product itself and later apply the importance of management in product differences.

By utilizing the concept of modularization in applications, first, in this thesis, the implications of modularization are used for product functionality analysis. Later on the result from the analysis is used as the basis for the modular architecture of LCD TV. By using modular structure to add to delete functions, derived products are developed to meet the needs of the different market. This has the advantages of shortening the product development time, increasing the product competitiveness and also bringing product variety. As a result of modular design, fast product innovation time will soon challenge the LCD TV industry.

As modular design becoming more popular, LCD TV will soon follow the footsteps of PC in its design. For a flexible, lower cost, fast delivered product, the quicker it responses to the needs of the customers, the more competitive it is. The future of the LCD TV industry should use modular design to achieve the aims of lowering the cost, bringing product variety, shorten product development time and providing fast delivery of products.

4.2 Future Studies

The concept of modular design will result in various derived products in the same series. Therefore there should be an efficient management for these derived products. In the future we will concentrate on using the PDM (Product Data Management) system to assist in the management of derived products. The data from R&D, manufacturing, sales and maintenance procedures, which include all product specifications, diagrams, technical documents and BOMs, and their derived data can all be managed by a PDM system. By using an electronic management system to help with recording and controlling the BOM, the development process can be facilitated and hence high quality is assured.

Besides this, modular design also forms the basis of global logistic management. Therefore the issues of forecasting, manufacturing, assembling and delivery of LCD TV are all based on the modular design. In addition, it is worthwhile to discuss whether the help of an electronic management system will smooth the operations of a global logistic management.

REFERENCES

1. Baldwin, C. Y. and Clark, K. B., 2003, *Design Rule: Volumn 1, The Power of Modularity*, Cambridge: Harvard Business School.
2. Cassell, J., 2005, *TFT-LCDs to Coexist with Other Displays, iSuppli Says at SID 2005*, iSuppli Market Watch, iSuppli Corporation, http://www.isuppli.com.
3. Chen, L. Y., 2006, *Layout, Orientation and Development of Business Chance on LCD TV Industrial Chain in Taiwan*, Chi-Mei Electronic Digital TV Technology Forum, Taipei. (in Chinese)
4. Fernandez-Ranada, M., Gurrola-Gal, F. J. and Lopez-Tello, E., 1993, "3C - A method to reach total customer service," *Annual International Conference Proceedings - American Production and Inventory Control Society*, pp. 529-533.
5. Haruki, E., 2006, "Worldwide LCD TV 2006-2010 forecast and analysis: Market maturation," *International Data Corporation (IDC)*, http://www.idc.com.
6. He, D. W. and Kusiak, A., 1997, "Design of assembly systems for modular products," *IEEE Transactions on Robotics and Automation*, Vol. 13, No. 5, pp. 646-655.
7. Hsuan, J., 1999, "Impacts of supplier-buyer relationships on modularization in new product development," *European Journal of Purchasing and Supply Management*, Vol. 5, No. 3/4, pp. 197-209.
8. Huang, C. C. and Kusiak, A., 1998, "Modularity in design of product and systems," *IEEE Transactions on Systems, Man, and Cybernetics, Part A*, Vol. 28, No. 1, pp. 66-77.
9. Jian, M. C., 2003, "A study on theory and practice of modularity - A case study of electronic company, B company," *Institute of Management of Business Administration, National Chengchi University, Taiwan, Master Thesis*.
10. Kamrani, A. K., 1997, "Modular design methodology for complex parts," *Industrial Engineering Research - Conference Proceedings*, pp. 391-396.
11. Kamrani, A. K., 2000, *Product Design for Modularity*, Boston Kluwer Academic Publishers, pp. 19-22.
12. Kusiak, A. and Huang, C. C., 1996, "Development of modular products," *IEEE Transactions on Components, Packaging, and Manufacturing Technology, Part A*, Vol. 19, No. 4, pp. 523-538.
13. Lai, S. M., 2002, *Global Supply Chain Management*, ARC, Taipei. (in Chinese)
14. O'Grady, P., 1999, *The Age of Modularity*, Adams and Steele Publishers, Iowa City, IOWA, pp. 12-18.
15. Salhieh, S. M. and Kamrani, A. K., 1999, "Macro level product development using design for modularity product design for modularity," *Robotics and Computer-Integrated Manufacturing*, Vol. 15, No. 4, pp. 319-329.
16. Sanchez, R. and Collins, R. P., 2001, "Competing and learning in modular markets," *Long Range Planning*, Vol. 34, pp. 645-667.
17. Sanchez, R. and Machoney, J. T., 1997, "Modularity, flexibility, and knowledge management in product and organization design," *IEEE Engineering Management Review*, Vol. 25, No. 4, pp. 50-61.
18. Shirley, G. V., 1992, "Modular design and manufacturing for competitive manufacturing," *Integrating Design and Manufacturing for Competitive Advantage*, pp. 82-103.
19. Ulrich, K. and Eppinger, S. D., 1995, *Product Design and Development*, McGraw-Hill, New York.
20. Ulrich, K. and Tung, K., 1991, "Fundamentals of product modularity," *American Society of Mechanical Engineers, Design Engineering Division (Publication) DE*, Vol. 39, pp. 73-39.
21. Ulrich, K., 1995, "The role of product architecture in the manufacturing firm," *Research Policy*, Vol. 24, pp. 419-440.
22. Wacker, J. G., 2000, "Configure-to-order planning bills of material: Simplifying a complex product structure for manufacturing planning and control," *Production and Inventory Management Journal*, Vol. 41, No. 2.
23. Young, R., 2006, "TV market outlook," *8th*

Annual Display Search US FPD Conference-Desiplay Search, http://www.displaysearch.com.

ABOUT THE AUTHORS

Yuan-Ping Luh is an assistant professor in Institute of Manufacturing Technology at National Taipei University of Technology, Taiwan, R.O.C. He received his Ph.D. degree from Cornell University in 1996. He has been an e-Business consultant since 1997. After 2002, he starts his academic career. His current research focuses on the information management technologies and applications for global manufacturing industry, including collaborative system development, product data management, supply chain management, product lifecycle management, collaborative product commerce, and global logistics management.

Chih-Chin Pan is currently a PhD student in Institute of Mechanical and Electrical Engineering at National Taipei University of Technology, Taiwan, R.O.C. He has been a consultant and technical manager on PLM system implementation for over ten years. His research interests include product lifecycle management, e-Business, and supply chain management.

Wei-Sheng Lin is a graduated student in Institute of Mechtronic Engineering at National Taipei University of Technology, Taiwan, R.O.C. His research interests include product data management and modular design applications.

(Received August 2006, revised November 2006, accepted December 2006)